IRONWOOD Widespread Faucet

Specifications

Flow Rate (GPM)	1.68 GPM @ 60 psi
Material Content	Brass body with brass handle
Pop-Up Drain	Brass and stainless steel pop-up
Spout Reach	4-15/16"
Cartridge	Ceramic disk Cartridge
Lever Handle Operation	(1/4) quarter turn stop
Installation Type	6-16" center mount

Dimensions

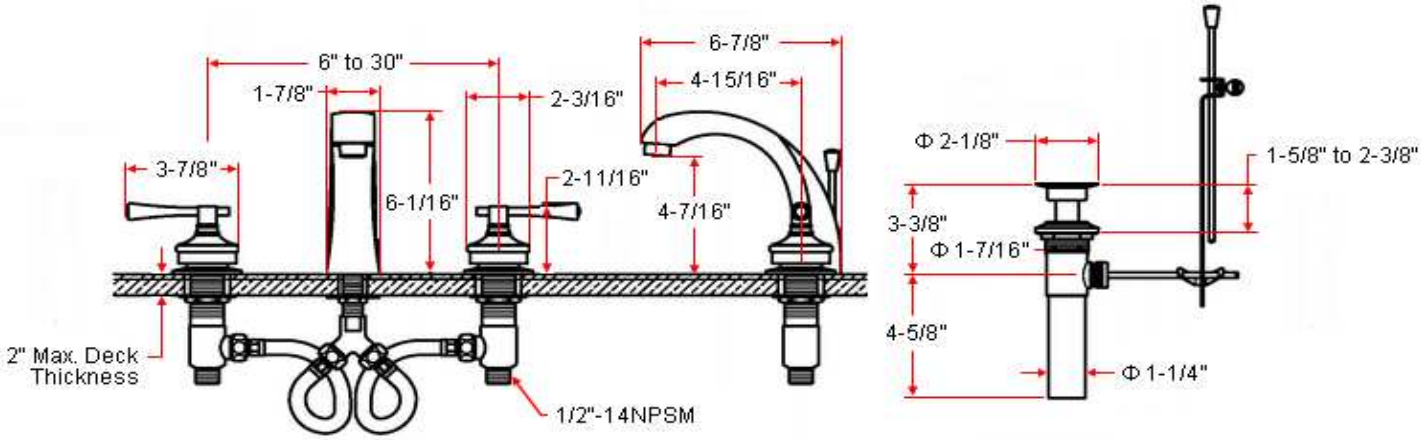

Warranty & Compliances

Warranty	Lifetime Limited Warranty
IAPMO/UPC	UPC & cUPC Compliant
ASME	ASME A112.18.1-05
ANSI	Compliant
ADA	Compliant
NSF	Compliant
CSA	CSA B125.1-05

Order Codes & Finishes/Colors

Satin Nickel (US15)	528455	TRU MATCH
Statuary Bronze	528406	TRU MATCH

Type:
Job:
Order Code:
Approvals:

Design House reserves the right to make changes in materials, specifications & models at any time. Design House also reserves the right to discontinue product without notice or obligation.