Universal Tub & Shower Valve

Specifications

Material Content:	Brass body, brass waterway
Cartridge:	Ceramic Disc Cartridge; Pressure Balanced
Plastic Guard:	Included

Dimensions

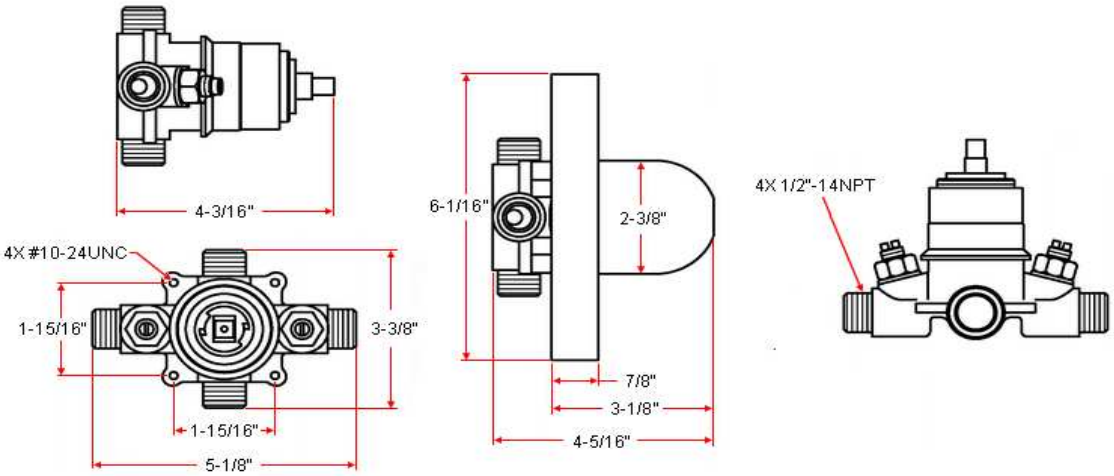

Warranty & Compliances

Warranty	Lifetime Limited Warranty
IAPMO/UPC	UPC & cUPC Compliant
ASME	ASME A112.18.1-05
ANSI	Compliant
CSA	CSA B125.1-05

Order Codes & Finishes/Colors

520791

Type:
Job:
Order Code:
Approvals:

Design House reserves the right to make changes in materials, specifications & models at any time. Design House also reserves the right to discontinue product without notice or obligation.