Design House is a registered brand of DHI Corp.

Mequon, WI 53092
1-800-558-8700

PERTH SINGLE HANDLE VESSEL FAUCET

Models 546911

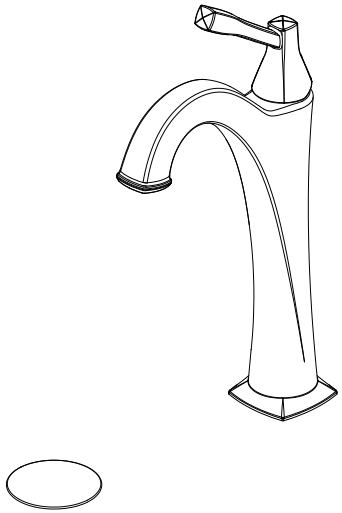

Your new Design House faucet will give you years of trouble free performance. Thank you for choosing our product for your home. **Please read all of these instructions carefully before installing your new faucet.**

Helpful tools to install this faucet:

- basin wrench
- Teflon tape
- (2) crescent wrenches
- silicon sealer
- flashlight
- faucet supply tubes

IMPORTANT POINTS

- When installing your new faucet, hand tighten the connector nuts, then use one wrench to anchor the fitting and a second wrench to tighten the nut one additional turn. Connections that are too tight will reduce the integrity of the system.
- Wrap threaded connections (except aerator thread in spout or where o-ring or rubber sealant are present) with Teflon tape available from your local hardware or plumbing supply store. Always wrap in a clockwise direction.

SAFETY TIPS

- **ALWAYS** protect your eyes with safety glasses.

INSTALLATION PROCEDURE

1. Shut off water supplies. Remove the old faucet. Place the flange (1A) onto the bottom of the new faucet assembly. Place the faucet assembly through the mounting holes in sink. Secure the faucet assembly to sink using the washers (1B) and nut (1C) provided.

2. Thread the nut (2A) on the supply line onto the outlet of the water supply valve (2B) and tighten with a wrench. Do not overtighten.

3. IMPORTANT: After installation is complete, remove the aerator to flush the water lines. Turn on the water supply and allow both hot and cold water to run for at least one minute each. This flushes away any debris that could cause damage to internal parts. While the water is running, check for leaks. Turn off the water and replace the aerator.

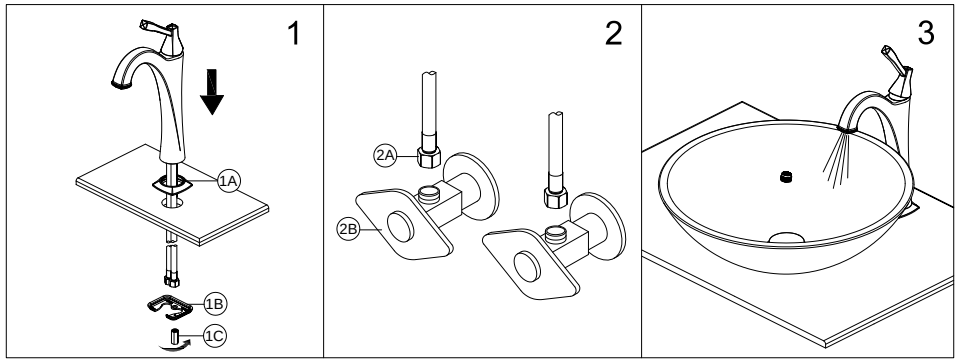

MAINTENANCE

Your new Design House faucet is designed to give you years of trouble free performance. Avoid abrasive cleaners, steel wool and harsh chemicals that will dull the finish and void your warranty.

Brass finishes are polished, then protected with a PVD or a lacquer coating to help prevent tarnishing. Clean these surfaces only with a damp, soft cloth.

Keep it looking like new by cleaning it periodically with a mild solution of soapy water. Rinse thoroughly and then dry with a soft cloth.

CONSUMER PROTECTION WARNING

Under the Safe Drinking Water Act, the U.S. Environmental Protection Agency restricts the amount of lead used in brass and solder. Your new faucet is made in strict compliance with all government standards. The materials used in the manufacture of this faucet are of industry standard quality and are similar to other plumbing products having brass fittings.

To reduce the amount of lead in your drinking water, allow the water to run for a moment before filling your glass and remember to always use cold water for drinking purposes.

TROUBLE SHOOTING

o 546911 - Satin Nickel

Problem: Faucet leaks from under handle.

Cause: Bonnet is loose or o-ring on cartridge is dirty or twisted.

Action:
1. Move handle to OFF position. Remove the index and unscrew the set screw on handle, then remove the handle. Loosen the connector and cap.
2.Tighten the bonnet by turning it clockwise. Move the cartridge stem to the ON position. The leak should stop around the cartridge stem.
3. If the leak does not stop, shut off the water supply. Remove the bonnet by turning it counter-clockwise. Lift out the cartridge valve. Inspect the larger O-ring on the cartridge bonnet and the smaller O-rings on the cartridge stem. Remove any debris from the O-rings. If either O-ring is twisted, straighten it out. If either O-ring is damaged, replace the cartridge.
4. Tightly screw the bonnet onto the faucet body.
5. Reinstall the handle.

Problem: Faucet leaks around aerator or an improper flow pattern.

Cause: Aerator is incorrectly fitted or is dirty.

Action:
1. Unscrew the aerator.
2. If there is debris, gently flush the aerator.
3. Reinstall the aerator.

Many of these parts come preassembled. This exploded diagram is to assist in trouble shooting.

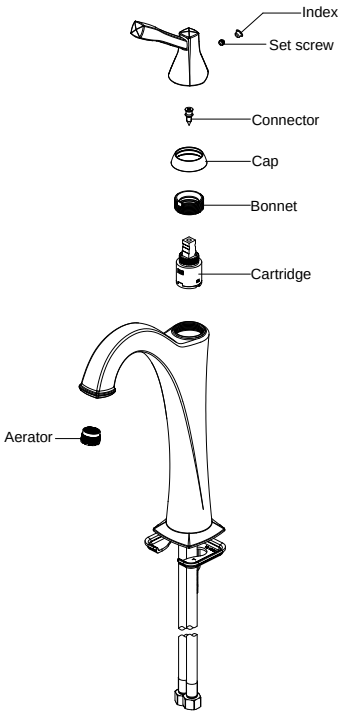

POP-UP INSTALLATION EXPLODED PARTS

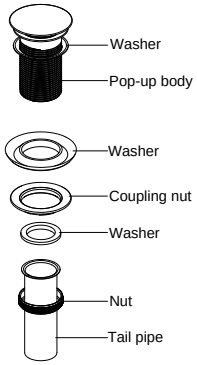

POP-UP INSTALLATION PROCEDURE

1. Remove the old pop-up drain and clear up the hole in preparation for the new pop-up drain installation. Unscrew the nut (1) from the pop-up body (2), move over the tail pipe (3) and washer (4), then unscrew the coupling nut (5) and remove the washer (6).

2. Place the washer (1) underneath the flange of the pop-up body (2). Slide the pop-up body (1) down through the drain hole on the vessel or basin. From underside, slide the washer (3) against the bottom of the vessel or basin, thread on the coupling nut (4) and tighten. Do not over tighten.

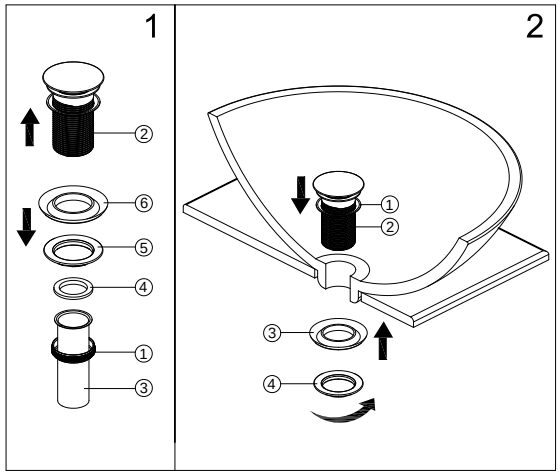

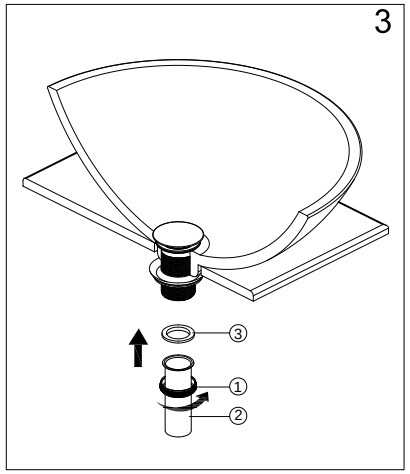

3. Slide the nut (1) over the tail pipe (2). Place the washer (3) into the nut and tighten. Do not overtighten.